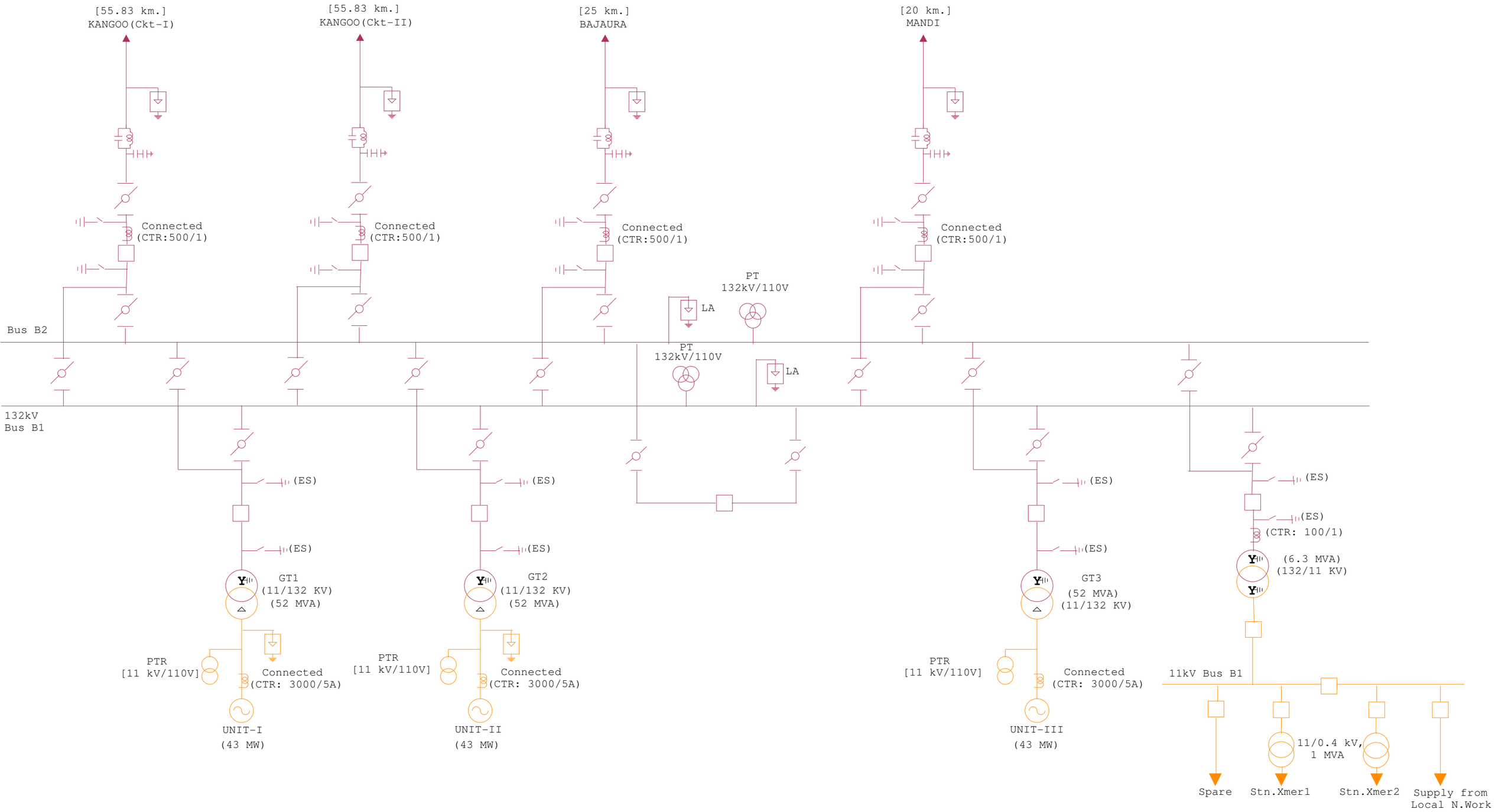SINGLE LINE DIAGRAM OF LARJI